Lamp Stations

890 Series

Overview

ADT 890 Series Lamp Stations are designed for placement on the wall or ceiling above fire alarm manual pull stations. Wired with the individual fire alarm station, the corridor lamp will “light up” and visually indicate when that station has been “pulled”. This allows the building authorities to quickly recognize what pull station has been activated.

All models feature a large translucent plastic lens easily seen from all angles. WHITE or RED lenses are available to meet local requirements. Red lenses have “FIRE” printed in white; white lenses have “FIRE” printed in red.

ADT 890 series Lamp Stations are supplied with 24 volt (0.18 amps) or 120 volt (0.05 amps) lamps, supervision diode, wedge shaped plastic lens and two-gang brushed stainless-steel face plate. Wiring connections are made to six-inch (150mm) wire leads.

These Lamp Stations flush mount over standard North American one or two-gang electrical boxes, or surface mount to two-gang Wiremold (or equivalent) boxes.

Standard Features

- Wall or ceiling mount
- Large RED or WHITE lens
- Stainless steel faceplate
- Diode supervised
- 24 Vdc or 120 Vac
- Easy installation
- Sturdy design

Installation

ADT recommends that these Fire Alarm Stations always be installed in accordance with the latest recognized issue of national and local fire alarm codes.

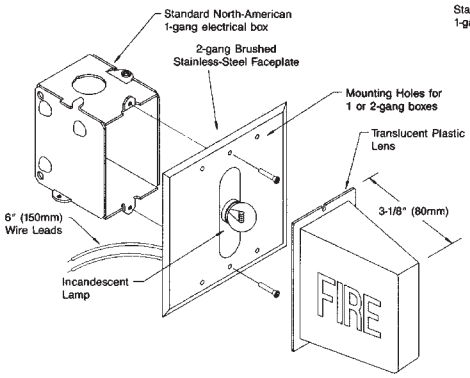

Wall Mount

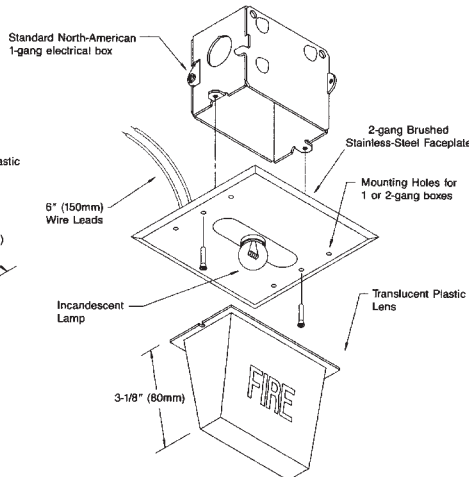

Ceiling Mount

Specifications

Catalog Number	890RDA	890RDB	890WDA	890WDB
Mounting Style	Ceiling	Wall	Ceiling	
Lens Color	Red with White "FIRE"		White with RED "FIRE"	
Operating Voltage	24 Vdc 120 Vac	24 Vdc		
Operating Current	0.18 Amps — 24 Vdc 0.05 Amps — 120 Vac	0.18 Amps — 24 Vdc		
Flush Mounting	Standard North-American one or two-gang Electrical Box			
Surface Mounting	Wiremold or equivalent two-gang Box			
Faceplate	two-gang Brushed Stainless-steel			
Wiring Connection	six-inch (150mm) Wire Leads			
Operating Environment	Standard Indoor only (Dry)			

Ordering Information

Catalog Number	Description	Ship Weight
890RDA	Lamp Station—Wall Mount, Red Lens with white "FIRE" includes 1-120 Vac and 1-24 Vdc lamp.	0.5 lb (0.2 kg)
890WDA-G5	Lamp Station—Wall Mount, White Lens with red "FIRE", 24 Vdc	
890RDB-G5	Lamp Station—Ceiling Mount, Red Lens with white "FIRE", 24 Vdc	
890WDB-G5	Lamp Station—Ceiling Mount, White Lens with red "FIRE", 24 Vdc	

CAUTION: These devices will not operate without electrical power. As fires frequently cause power interruptions, we suggest you discuss further safeguards with your fire protection specialist.

© 2007 ADT Security Services, Inc.
One Town Center Road
Boca Raton, FL 33489
www.adt.com